FEDERAL BRACE™

www.federalbrace.com

Beautifully Crafted, Confident Support

877.353.8899

San Juan Floating Countertop Support

SKU	SIZE	MATERIAL
31402	11”x11”	Steel
31404	11”x11”	Stainless Steel

Welding Technique:

All gusseted support welding is hidden from the face of the bracket. Plug welding is done on the reverse side to give a clean and sleek look.

Material Thickness:

1/4”

Material Types:

304 Stainless Steel

1008 Cold Rolled Steel (Raw)

Finish Types:

Electrostatic Powder Coat Painting

Antique Bronze Painting

Mounting Plates Size:

3” wide 4” tall

Holes Specification:

Countersunk holes for 1/4” screws/bolts

Bottom Plate Holes:

½” from Top or Bottom Edge/Bend

1” from side edge (1½” bottom hole from side edge)

1” apart from each other

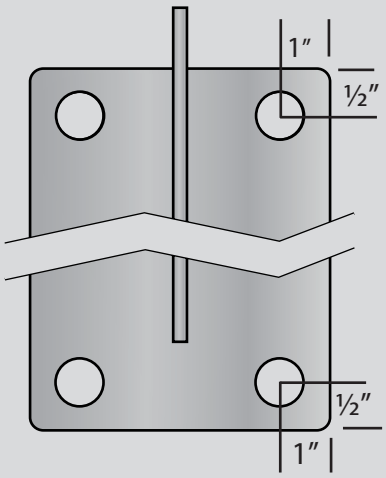

All holes are measured from edge of bracket or bend to the center of the hole.